BEST QUALITY
BEST
SELLER

Ofuro

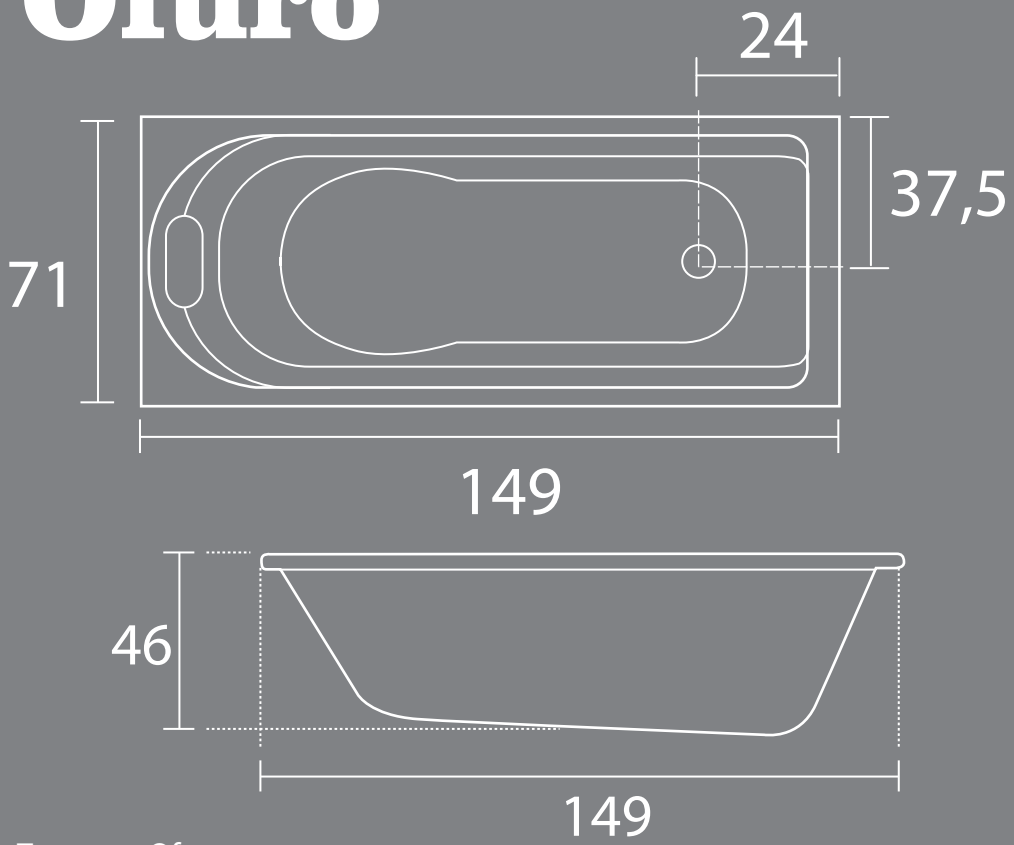

Type : Ofuro
Size : 149 x 71 x 46
Material : Acrylic/Marble/Onyx